LiGHT SKY

www.lightsky.com.cn

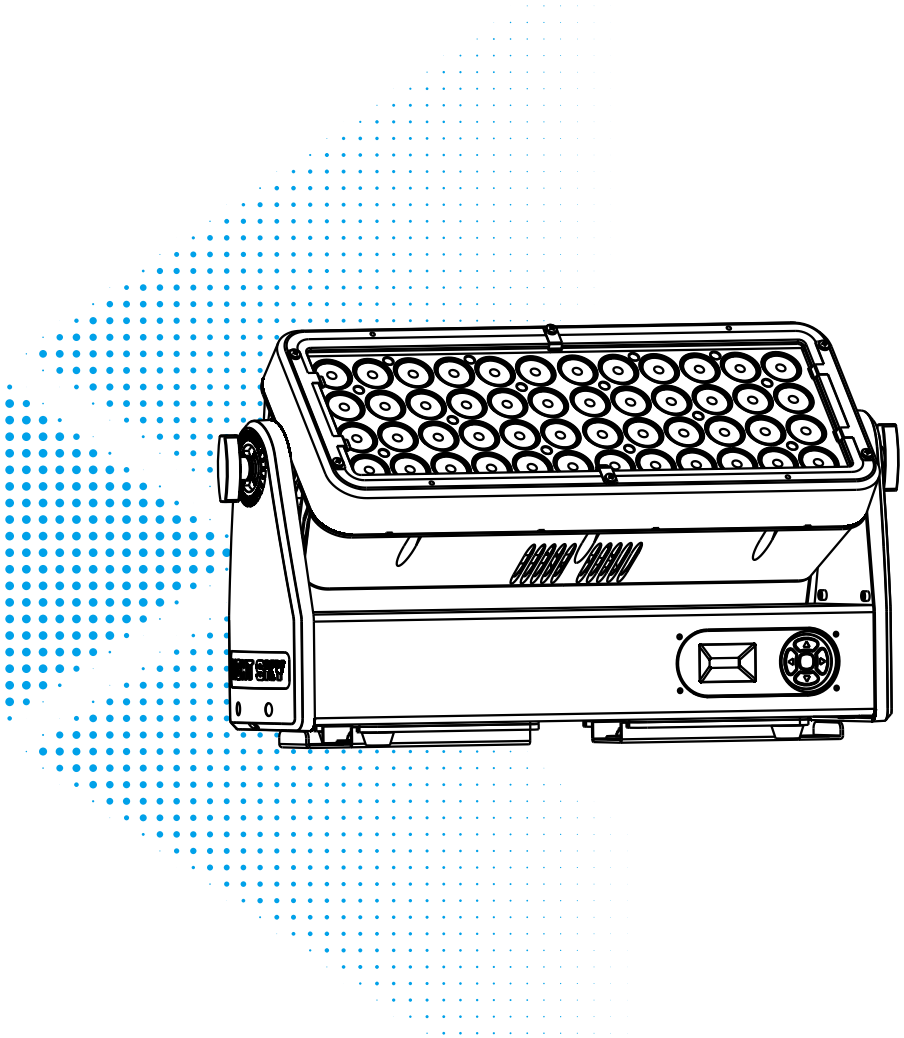

SIRENA

User Manual

Please read the instruction carefully before use

Fly Dragon Lighting Equipment Co., Ltd.

Add : NO.4 JINGNENG ROAD 1, HUADU DISTRICT, GUANGZHOU, CHINA.
Tel : 020-61828288 Fax : 020-61828188 Postal Code : 510820
Email : flydragon@lightsky.com.cn

Social Media

LiGHT SKY Wechat

CONTENTS

1. Safety Instructions.....2
2. Technical Specifications.....5
   2.1. Attachment And Size.....7
3. Control Panel.....8
4. How To Set The Unit.....9
   4.1. Main Function.....9
5. Connection And Control.....14
   5.1. Power Supply Connection.....14
   5.2. DMX 512 Connection.....15
   5.3. Channel Setting.....16
   5.4. Address Setting.....16
   5.5. DMX 512 Configuration.....17
6. Electrical Connection Diagram.....23
7. Troubleshooting.....24
8. Fixture Cleaning.....25
9. Duty Exonerative And Copyright Protectio.....25

Congratulations on choosing our company product! We thank you for your custom.

- Please keep in mind that this product, like other products of the company, adheres to the concept of people-oriented design and manufacture, and takes product quality as the foundation.
- We put the interests of customers first, and do our best to meet customer requirements.
- Please read this instruction manual carefully and keep it for future reference. In the case of fully understanding the product information, strictly abide by theUse the instruction manual to ensure that the product is installed, used and serviced correctly and safely.
- Our company is not responsible for any damage to lamps or other performance due to personal failure to follow the instructions during installation, use and maintenance.responsibility.
- Our company reserves the right to modify the manual at any time and without prior notice.

1.Safety Instructions

Please read the instruction carefully which includes important information about the installation, usage and maintenance.

WARNING

Please keep this User Manual for future consultation. If you sell the unit to another user, be sure that they also receive this manual.

The following symbols are used to identify important safety information on the product and in this manual:

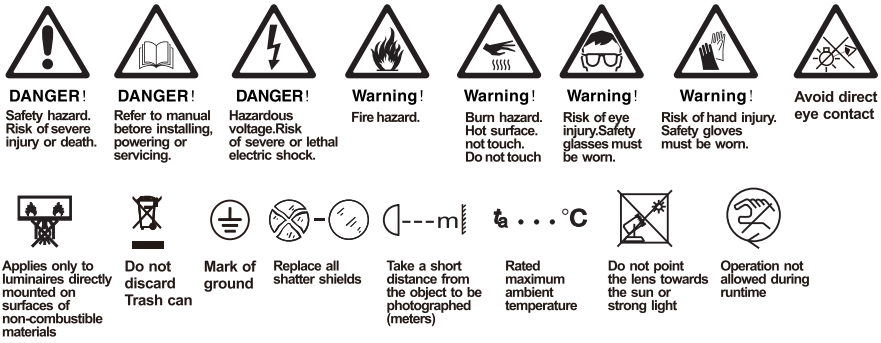

Important:

Damages caused by the disregard of this user manual are not subject to warranty.

The dealer will not accept liability for any resulting defects or problems.

- Unpack and check carefully to ensure that there is no transportation damage before using the unit.
- Do install and operate by qualified operator.
- The light source in this luminaire should be replaced by the manufacturer or its service agent or a similarly qualified person, always cut off the power supply before replacing he light source.
- Do not allow children to operate the fixture.
- Use safety chain when fixing the unit. Handle the unit by carrying its base instead of head only.

- The unit must be installed in a location with adequate ventilation, at least 20cm from adjacent surfaces.
- Be sure that no ventilation slots is blocked, otherwise the unit will be overheated.
- Before operation, ensure that you are connecting this product to the proper voltage in accordance with the specifications in this manual or on the product's specification label.
- It's important to ground the yellow/green conductor to earth in order to avoid electric shock.
- Minimum ambient temperature TA: -20℃. Maximum ambient temperature Ta: 45℃. Do not operate this product at a lower or higher temperature.
- Do not connect the device to any dimmer pack.
- When the lamp is running, do not place combustible objects next to it. The shortest distance between the device and inflammable and explosive objects or materials is 0.5m.
- Make sure the power cord is not crimped or damaged; replace it immediately if damaged.
- Unit's surface temperature may reach up to 80℃. do not touch the housing bare-handedduring its operation.
- Avoid any flammable liquids, water or metal from entering the unit. once it happens, cut off the mains power immediately.
- Do not operate in a dirty or dusty environment. do clean the fixture regularly.
- Do not touch any wire during operation as there might be a hazard of electric shock.
- Avoid entanglement of the power cord with other wires.
- The minimum distance to objects/surface must be more than 3 meters.
- In the event of serious operating problem, stop using the unit immediately.
- Never turn on and off the unit time after time.
- The housing, the lenses, or the ultraviolet filter must be replaced if they are visibly damaged.
- Do not open the housing as there are no user serviceable parts inside.
- Do not attempt to operate this unit if it becomes damaged. Do not attempt any repairs yourself. Repairs carried out by unskilled people can lead to damage or malfunction. Please contact the nearest authorized technical assistance center if needed.
- Disconnect this product from its power source before servicing.

- Do use the original packaging if the device is to be transported.
- Avoid direct eye exposure to the light source while the product is on.
- Do not operate this product if you see damage on the housing, shields, or cables. have the damaged parts replaced by an authorized technician at once.

Installation:

The fixture should be fixed on the clamp. Always ensure that the unit is firmly fixed to avoid vibration and slipping off during operation. Ensure that the trussing or area of installation must be able to hold 10 times the weight without any deformation. Always install a safety cable that can hold at least 12 times the weight of the fixture when installing.

Do install and operate by qualified operator. It must be installed in a place where there is out of the reach of people.

2.Technical Specifications

OPTICAL

- Luminous flux: 27000 lm
- Light Source: 48pcs*15W RGBL LED
- Color temperature: 2200K ~ 8500K adjustable
- Optical Angle: 18° (15°/22°/25° optional)
- Diffuser Angle: (20°/30°/40°/55° optional)

EFFECT

- Dimmer: 16Bit, 0-100% linear dimming, 4 dimming curves can select
- Stroboscopic: 1-25 electron stroboscopic and random stroboscopic
- LED Refresh Rate : 1000Hz ~ 25KHz

CONTROL

- Control mode: DMX512, RDM
- 4 in dividually controlled Pixel led zones
- Menu Displays device temperature, channel data, and software version information
- RDM Indicates bidirectional data transmission
- Channel mode: 9CH(Default), 24CH, 20CH, 16CH, 1CH, 3CH, 4CH-1, 4CH-2, 5CH, 7CH
  see channel table for details

SOFTWARE

- Upgrade software through the DMX signal interface
- Intelligent temperature control to ensure LED life
- Silent fan, intelligent temperature detection

TILT MOVEMENT

- Tilt rotation Angle ±100° manual adjustment

POWER

- Input voltage rangr: VAC 100-240V 50/60Hz
- Maximum power comsumption: 620W
- Power factor : 0.996

SIZE & WEIGHT

- Size: 528mm×144mm×290mm
- Standard carton packing (Default -1sets) :640mm x 265mm x 365mm
- N.W: 13.3 Kg G.W: 15.6Kg
- Flycase (option-5 sets) :1000mmx730mmx470mm
- N.W: 66.5 Kg G.W: 102.2Kg

OTHERS

- IP rate: IP65
- Working Ambient: -20 ° C - 45 ° C
- Maximum fixture connect in Power: 2 /110V 4 /220V
- Maximum current of fixture: 110V Maximum current: 5.6A; 220V maximum current: 2.82A
- Optional accessories: Light hook, shutters assembly, folding shutters assembly

APPROVALS

- The product implementation standard: GB/T 7000.1-2023 、 GB/T 7000.217-2023
- Approved certifications: CE、RoHs
- The product complies with the following EU directives:
- Low Voltage Directive 2014/35/EU . EMC Directive 2014/30/EU

Pixel zones

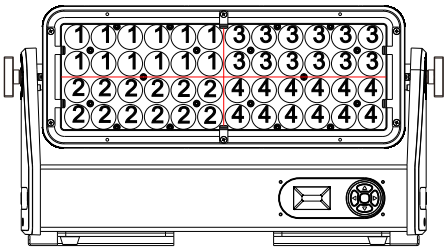

Foldable Barn doors components (Optional)

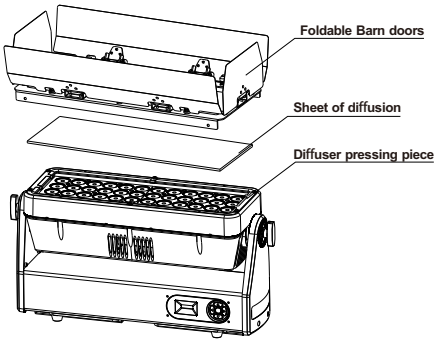

Fixed sunshade components (Optional)

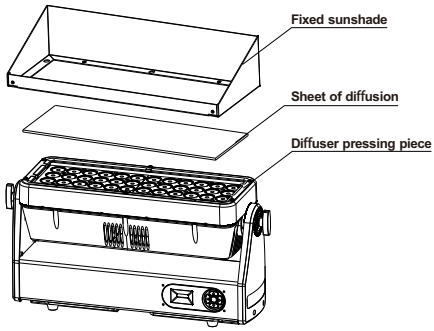

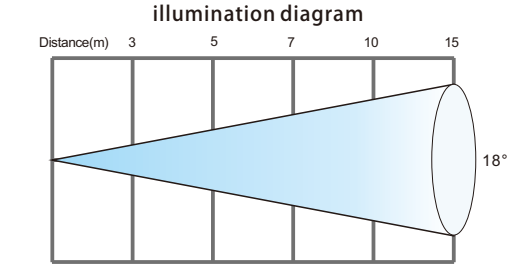

18° Lux R	3810	1372	700	343	152
G	6921	2492	1271	623	277
B	1267	456	233	114	51
L	7007	2523	1287	631	280
RGBL	17329	6238	3183	1560	693
Diameter (m)	0.98	1.56	2.21	2.95	4.7

2.1.Attachment And Size

Attachment contents-Fig.1

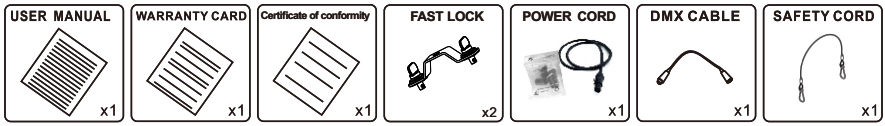

Size-Fig.2(Unit:mm)

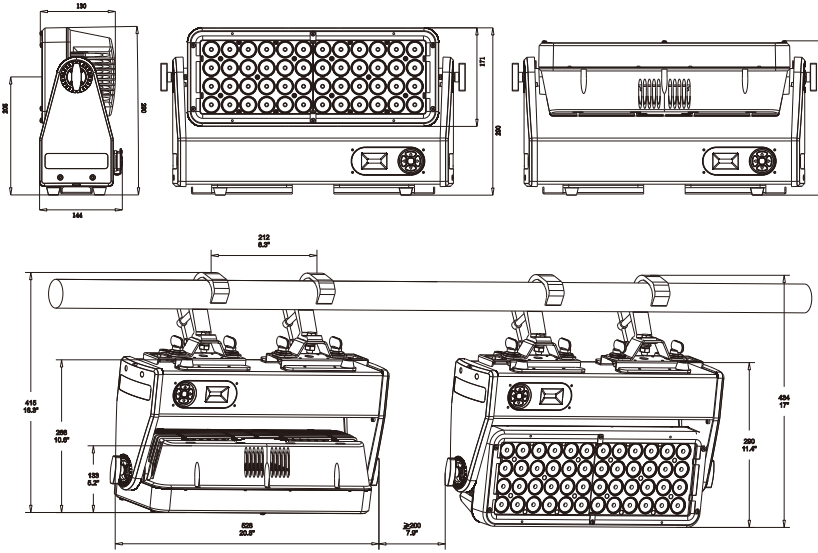

3.Control Panel

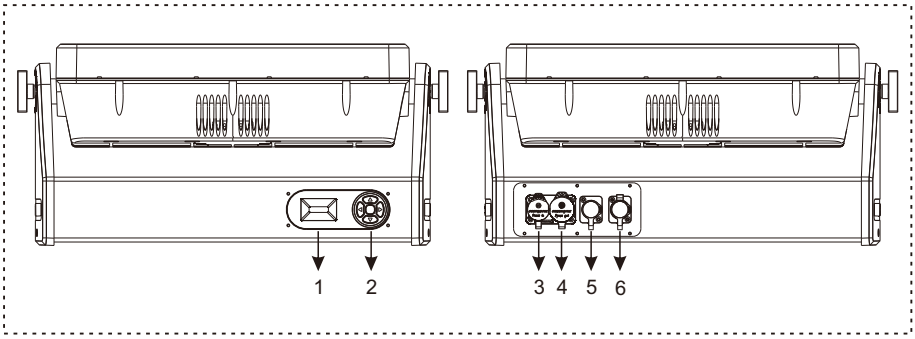

1. Display: To show the various menus and the selected function.

2. Button:

●	OK confirmation key
▲	UP
▼	DOWN
◀	To the left
▶	To the right

3. Power input: connect to the power supply.

4. Power output: connect to the lamp power output adapter.

5. DMX input: for DMX512 connection, use 3 or 5-core XLR signal cable to connect console and lamps,and input DMX signal.

6. DMX output: used for DMX512 connection, use 3 or 5-core XLR signal cable to connect console and lamps,And output DMX signal.

4.How To Set The Unit

4.1.Main Function

Turn on the fixture, press the OK button to enter the menu mode, use the UP/DOWN buttons to find the menu, when the preset menu is shown on the display, press the OK button to confirm, use the UP/DOWN buttons to select a submenu, then press the OK button to save Settings, use the left button to return to the previous menu.

The main functions are as follows:

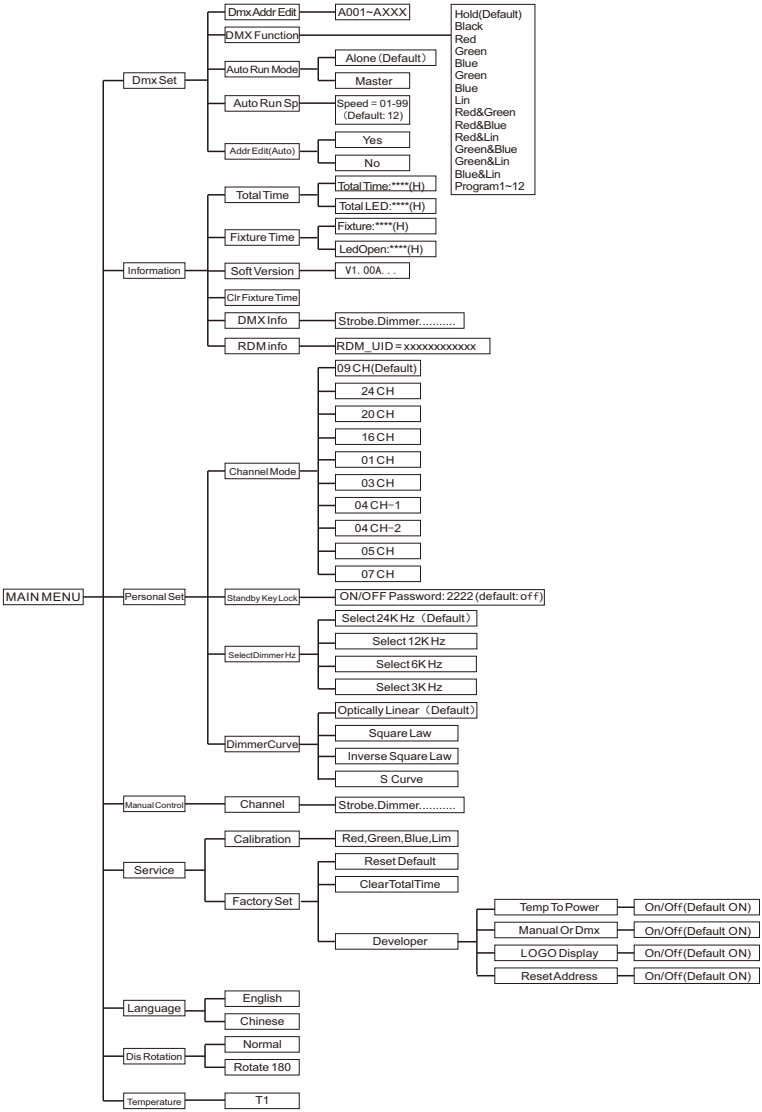

● **DMX Set**

Enter MENU, select **DMX Set** function, press OK button to confirm, use up/down button to select: Address code Setting, Function, Automatic mode,Automatic running speed, automatic edit address code, press the left button to return to the main menu.

Dmx Addr Edit

Select the **Dmx Addr Edit** and press the OK button to confirm. The current DMX address will be displayed on the display. Use the up/down buttons to select addresses from 001 to 512,Press the OK button to save. Press the OK button to return to the previous menu. (Note: After the successful writing of the address code in batches, the lamps will light up successively: red, green, blue,Lemon color, finally stroboscope twice, then switch back to the original light)

DMX Function

Select **DMX Function**, press OK button to confirm, use up/down button to select desired function: DMX Hold (default), DMX black field, red, green, blue,Lemon color, red + green, red + blue, red + lemon, green + blue, green + lemon, blue + lemon, self-run program 1~12, press OK button to saveAnd return to the previous menu.

Auto Run Mode

Select **Auto Run Mode**, press OK button to confirm, use up/down button to select channel mode: single machine (default), host, press OK button to saveAnd return to the previous menu.

Auto Run Sp

Select **Auto Run Sp**, press OK button to confirm, use the up/down button to adjust the self-propelled speed (01-99) (the default self-propelled speed is 12), press OK button Save and return to the previous menu.

Addr Edit（Auto）

Select **Addr Edit（Auto）**, press OK button to confirm, use up/down button to view channel mode: Free channel mode, channel 09 (default)24 channel, 20 channel, 16 channel, 01 channel, 03 channel, 04 channel 1, 04 channel 2, 05 channel, 07 channel, press OK button to enter the selection interface. Press the up/down key to select: Yes/No, press the OK key to confirm and return to the upper menu.

● **Information**

Enter the MENU menu, select the i **Information** function, press the OK button to confirm, use the up/down button to select: total running time, device time, software version, clear device time, DMX channel information, RDM Info.

Total Time

Select **Total Time**,press the OK button to confirm. You can view the device: total time and total on-light time. You can switch between "Hour/minute" by pressing the left/right button.Press the left button or OK key to return to the previous menu.

Fixture Time

Select **Fixture Time**, press the OK button to confirm, you can view the device: device time, light on time. Press the right/left button to switch between hours/minutes.Press the left button or OK key to return to the previous menu.

Soft Version

Select **Soft Version，** press the OK button to check the device: current software version information. Press the left button or OK key to return to the previous menu.

Clr Fixture Time

Select **Clr Fixture Time ，** press the OK button to confirm. The running time information of the device can be cleared. Press the OK key to return The corresponding password can be used for operation.

DMX Info

Select **DMX Info**, press OK button to confirm, you can view the device: channel information of the current channel. Press the left button or OK key to return to the previous menu.

RDM Info

Select **RDM Info ，** press OK to confirm. You can view device RDM_UID. Press the left button or OK key to return to the previous menu.

● **Personal Set**

Enter the MENU menu, select the **Personal Set** function, press OK button to confirm, use the up/down button to select: channel mode, standby menu lock, select dimming frequency, select dimming curve, and press the left button to return.

Channel Mode

Select **Channel Mode**, press OK button to confirm, you can use up/down key to select: 09 channel (default), 24 channel, 20 channel, 16 channel, 01 channel, 03 channel, 04 channel 1, 04 channel 2, 05 channel, 07 channel, press OK key to select confirm and return to the menu of the previous level.

Standby Key Lock

Select **Standby Key Lock**, press OK button to confirm, press up/Down button to select: On, Off (Password: 2222 ,default: off) press OK button to confirm and return to the previous level menu.

Select Dimmer Hz

Select **Select Dimmer Hz**, press OK button to confirm, you can use the up/down key to select: 24K Hz dimming (default), 12K Hz dimming,6K Hz dimming, 3K Hz dimming, press OK to confirm and return to the previous menu.

Select Dimmer Curve

Select **Select Dimmer Curve**, press OK button to confirm, you can use the up/down key to select: linear dimming (default), square dimming, inverse square dimming,S-curve dimming, press OK key to confirm and return to the previous menu.

Dimmer Modes

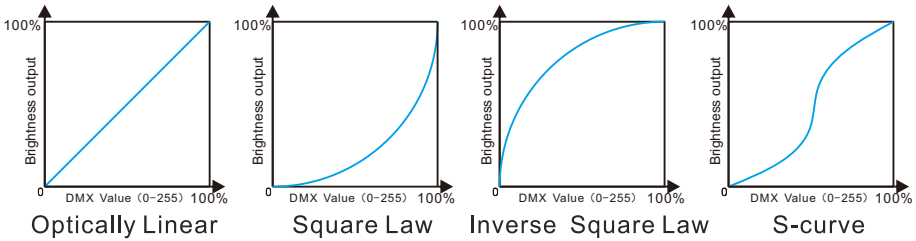

● **Manual Control**

Enter MENU , select **Manual Control** function, press OK button to confirm entry, select channel, press OK key to enter, use up/down key Select each channel, press left/right button to adjust the DMX value of the selected channel, press OK button to return to the menu of the previous level.

● **Service**

Enter MENU, select **Service**, press OK button to confirm, you can use up/down key to select: channel calibration, factory setting,Press OK to confirm, then press the left button to return to the previous menu.

Calibration

Select **Calibration**, Press OK button to confirm, press up/down button to select: red, green, blue, lemon, press left/right button can Fine-tune the color saturation of RGBL from 0 to 255 (default value is 0), then press OK button to confirm and return to the previous menu.

Factory Set (developer options, not operable)

Select **Factory Set**, Press left/right button to select, press OK button to confirm, you can use up/down button to select: restore factory Settings, clear the total time, developer, press the left button to return to the previous menu.

● **Language**

Enter the MENU menu, select the **Language** function, press OK button to confirm, use the up/down button to select: English, Chinese (default),Press OK to confirm and return to the previous menu. Special key function description: in standby state, press left/right key at the same time, hold for 3 seconds, Switch between Chinese and English display.

● **Dis Rotation**

Enter the MENU menu, select **Dis Rotation** function, press OK button to confirm, use up/down button to select: normal (default),Rotate 180 degrees and press OK to confirm and return to the previous level menu. Special key function description: in standby state, press up/down button at the same time,Hold for 3 seconds and reverse direction of display.

● **Temperature**

Enter the MENU menu, select the **Temperature** function, press OK button to confirm, check the temperature of the light plate of the device, press left button or OK button to return Go to the upper menu.

5.Connection and control

5.1.Power supply connection

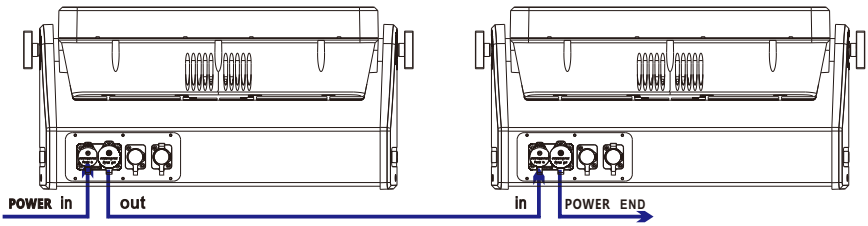

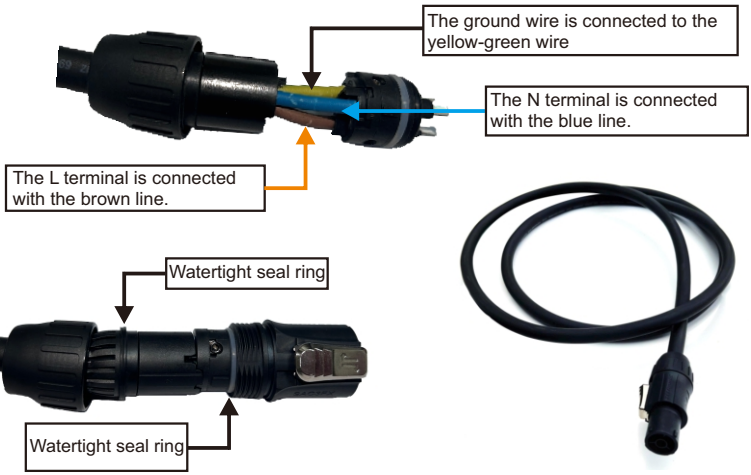

- The bus connecting the power supply must be installed by a qualified professional technician.
- After completing all the above operations and ensuring that it is installed, you can power on the lamp to operate.

5.2.DMX 512 Connection

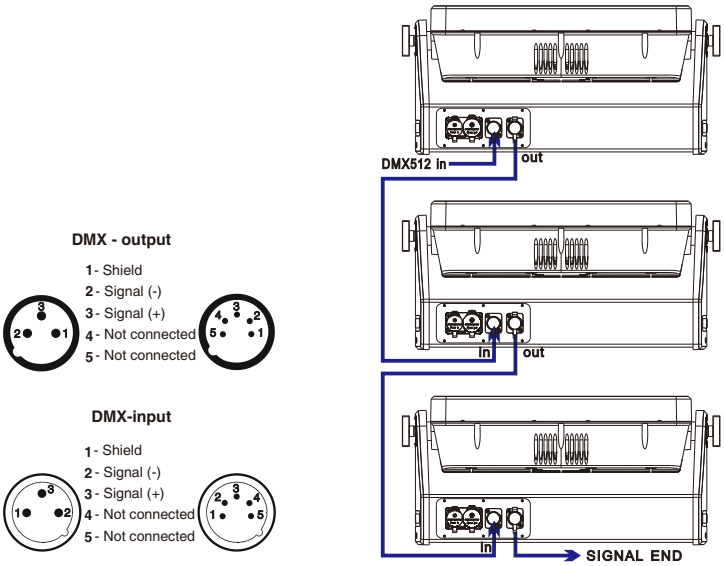

1. At last unit, the DMX cable has to be terminated with a terminator. Solder a 1200hm 1/4W resistor between pin 2(DMX-) and pin 3(DMX+) into a 3-pin XLR-plug and plug it in the DMX-output of the last unit.

2. Connect the unit together in a “daisy chain” by XLR plug cable from the output of the unit to the input of the next unit. The cable cannot be branched or split to a “Y” cable. DMX 512 is a very high-speed signal. Inadequate or damaged cables, soldered joints or corroded connectors can easily distort the signal and shut down the system.

3. The DMX output and input connectors are pass-through to maintain the DMX circuit, when one of the units’ power is disconnected.

4. Each lighting unit needs to have a DMX address to receive the data by the controller. The address number is between 1-512.

5. The end of the DMX 512 system should be terminated to reduce signal errors.

6. 3 pin XLR connectors are more popular than 5 pins XLR.

3 pin XLR: Pin 1: GND, Pin 2: Negative signal (-), Pin 3: Positive signal (+)

5 pin XLR: Pin 1: GND, Pin 2: Negative signal (-), Pin 3: Positive signal (+), Pin4, Pin5 not used.

5.3.Channel Setting

Enter the MENU menu, select the Personal Settings function, select the channel mode, press the OK button to confirm, you can use the up and down keys to select:09 channels (default), 24 channels, 20 channels, 16 channels, 01 channels, 03 channels, 04 channels 1, 04 channels 2, 05 channels, 07 channels,Press the OK key to enter the selection confirmation and return to the previous menu.

5.4.Address Setting

Enter MENU, select the DMX setting function, select the address code setting, press the OK button to confirm, the current DMX address will be displayed on the display. Use the up/down buttons to select addresses 001~512, and press the OK button to save. Press the OK button to return to the previous menu.

Please refer to the following diagram to address your DMX512 channel for the first 4 units.

Channel mode	Unit **1** Address	Unit **2** Address	Unit **3** Address	Unit **4** Address
9 CH	1	10	19	28
24 CH	1	25	49	73
20 CH	1	21	41	61
16 CH	1	17	33	49
01 CH	1	2	3	4
03 CH	1	4	7	10
04 CH-1	1	5	9	13
04 CH-2	1	5	9	13
05 CH	1	6	11	16
07 CH	1	8	15	22

5.5.DMX 512 Configuration

Please control the fixture by referring to the configurations below

9CH

Channel	Value/DMX	percentage	Function	Note
1	0..9 10..255		**Shutter** No function Strobe effect slow to fast	
2	0..255		**Dimmer** Dimmer 0%...100%	
3	0..255		**Red** 0-100% Red dimmer from dark to bright	
4	0..255		**Green** 0-100% Green dimmer from dark to bright	
5	0..255		**Blue** 0-100% Blue dimmer from dark to bright	
6	0..255		**Lime** 0-100% Lime dimmer from dark to bright	
7	0..2 3..49 50..99 100..149 150..199 200..249 250..255 255		**Color temperature selection** No function White Color Temp 2200K Section White Color Temp 3200K Section White Color Temp 4000K Section White Color Temp 5600K Section White Color Temp 6800K Section White Color Temp 7500K Section White Color Temp 8500K	
8	0..4 5..28 29..55 56..76 77..100 101..124 125..148 149..172 173..196 197..220 221..244 245..250 251..255		**Pixel Macro** No function Macro 1 Macro 2 Macro 3 Macro 4 Macro 5 Macro 6 Macro 7 Macro 8 Macro 9 Macro 10 Macro 11 Macro 12	
9	0..255		**Macro Speed** Macro Speed from slow to fast	
Remarks: After the address code is successfully written in batches, the lights will light up in sequence red, green, blue, lemon, and finally flash twice, and then switch back to the original light state.				

24CH

Channel	Value/DMX	percentage	Function	Note
1			**Shutter**	
	0..9		No function	
	10..255		Strobe effect slow to fast	
2			**Dimmer**	
	0..255		Dimmer 0%...100%	
3			**Red**	
	0..255		0-100% Red dimmer from dark to bright	
4			**Green**	
	0..255		0-100% Green dimmer from dark to bright	
5			**Blue**	
	0..255		0-100% Blue dimmer from dark to bright	
6			**Lime**	
	0..255		0-100% Lime dimmer from dark to bright	
7			**Pixel Macro**	
	0..4		No function	
	5..28		Macro 1	
	29..55		Macro 2	
	56..76		Macro 3	
	77..100		Macro 4	
	101..124		Macro 5	
	125..148		Macro 6	
	149..172		Macro 7	
	173..196		Macro 8	
	197..220		Macro 9	
	221..244		Macro 10	
	245..250		Macro 11	
	251..255		Macro 12	
8			**Macro Speed**	
	0..255		Macro Speed from slow to fast	
9			**Red in Pixel 1**	
	0..255		Red in pixel 1 saturation control (0-100%)	
10			**Green in Pixel 1**	
	0..255		Green in pixel 1 saturation control (0-100%)	
11			**Blue in Pixel 1**	
	0..255		Blue in pixel 1 saturation control(0-100%)	
12			**Lime in pixel 1**	
	0..255		Lime in pixel 1 saturation control(0-100%)	
13			**Red in pixel 2**	
	0..255		Red in pixel 2 saturation control(0-100%)	
14			**Green in pixel 2**	
	0..255		Green in pixel 2 saturation control(0-100%)	
15			**Blue in pixel 2**	
	0..255		Blue in pixel 2 saturation control(0-100%)	
16			**Lime in pixel 2**	
	0..255		Lime in pixel 2 saturation control(0-100%)	
17			**Red in Pixel 3**	
	0..255		Red in pixel 3 saturation control (0-100%)	
18			**Green in pixel 3**	
	0..255		Green in pixel 3 saturation control(0-100%	
19			**Blue in pixel 3**	
	0..255		Blue in pixel 3 saturation control(0-100%)	
20			**Lime in pixel 3**	
	0..255		Lime in pixel 3 saturation control(0-100%)	
21			**Red in Pixel 4**	
	0..255		Red in pixel 4 saturation control (0-100%)	
22			**Green in pixel 4**	
	0..255		Green in pixel 4 saturation control(0-100%)	
23			**Blue in pixel 4**	
	0..255		Blue in pixel 4 saturation control(0-100%)	
24			**Lime in pixel 4**	
	0..255		Lime in pixel 4 saturation control(0-100%)	

20CH

Channel	Value/DMX	percentage	Function	Note
1			**Shutter**	
	0..9		No function	
	10..255		Strobe effect slow to fast	
2			**Dimmer**	
	0..255		Dimmer 0%...100%	
3			**Pixel Macro**	
	0..4		No function	
	5..28		Macro 1	
	29..55		Macro 2	
	56..76		Macro 3	
	77..100		Macro 4	
	101..124		Macro 5	
	125..148		Macro 6	
	149..172		Macro 7	
	173..196		Macro 8	
	197..220		Macro 9	
	221..244		Macro 10	
	245..250		Macro 11	
	251..255		Macro 12	
4			**Macro Speed**	
	0..255		Macro Speed from slow to fast	
5			**Red in Pixel 1**	
	0..255		Red in pixel 1 saturation control (0-100%)	
6			**Green in Pixel 1**	
	0..255		Green in pixel 1 saturation control (0-100%)	
7			**Blue in Pixel 1**	
	0..255		Blue in pixel 1 saturation control(0-100%)	
8			**Lime in pixel 1**	
	0..255		Lime in pixel 1 saturation control(0-100%)	
9			**Red in pixel 2**	
	0..255		Red in pixel 2 saturation control(0-100%)	
10			**Green in pixel 2**	
	0..255		Green in pixel 2 saturation control(0-100%)	
11			**Blue in pixel 2**	
	0..255		Blue in pixel 2 saturation control(0-100%)	
12			**Lime in pixel 2**	
	0..255		Lime in pixel 2 saturation control(0-100%)	
13			**Red in Pixel 3**	
	0..255		Red in pixel 3 saturation control (0-100%)	
14			**Green in pixel 3**	
	0..255		Green in pixel 3 saturation control(0-100%	
15			**Blue in pixel 3**	
	0..255		Blue in pixel 3 saturation control(0-100%)	
16			**Lime in pixel 3**	
	0..255		Lime in pixel 3 saturation control(0-100%)	
17			**Red in Pixel 4**	
	0..255		Red in pixel 4 saturation control (0-100%)	
18			**Green in pixel 4**	
	0..255		Green in pixel 4 saturation control(0-100%)	
19			**Blue in pixel 4**	
	0..255		Blue in pixel 4 saturation control(0-100%)	
20			**Lime in pixel 4**	
	0..255		Lime in pixel 4 saturation control(0-100%)	

16CH

Channel	Value/DMX	percentage	Function	Note
1	0..255		**Red in Pixel 1** Red in pixel 1 saturation control (0-100%)	
2	0..255		**Green in Pixel 1** Green in pixel 1 saturation control (0-100%)	
3	0..255		**Blue in Pixel 1** Blue in pixel 1 saturation control(0-100%)	
4	0..255		**Lime in pixel 1** Lime in pixel 1 saturation control(0-100%)	
5	0..255		**Red in pixel 2** Red in pixel 2 saturation control(0-100%)	
6	0..255		**Green in pixel 2** Green in pixel 2 saturation control(0-100%)	
7	0..255		**Blue in pixel 2** Blue in pixel 2 saturation control(0-100%)	
8	0..255		**Lime in pixel 2** Lime in pixel 2 saturation control(0-100%)	
9	0..255		**Red in Pixel 3** Red in pixel 3 saturation control (0-100%)	
10	0..255		**Green in pixel 3** Green in pixel 3 saturation control(0-100%	
11	0..255		**Blue in pixel 3** Blue in pixel 3 saturation control(0-100%)	
12	0..255		**Lime in pixel 3** Lime in pixel 3 saturation control(0-100%)	
13	0..255		**Red in Pixel 4** Red in pixel 4 saturation control (0-100%)	
14	0..255		**Green in pixel 4** Green in pixel 4 saturation control(0-100%)	
15	0..255		**Blue in pixel 4** Blue in pixel 4 saturation control(0-100%)	
16	0..255		**Lime in pixel 4** Lime in pixel 4 saturation control(0-100%)	

1CH

Channel	Value/DMX	percentage	Function	Note
1	0..255		**ALL Dimmer** Dimmer 0%...100% Control all LED	

3CH

Channel	Value/DMX	percentage	Function	Note
1	0..255		**Red** 0-100% Red dimmer from dark to bright	
2	0..255		**Green** 0-100% Green dimmer from dark to bright	
3	0..255		**Blue** 0-100% Blue dimmer from dark to bright	

4CH-1

Channel	Value/DMX	percentage	Function	Note
1	0..255		**Dimmer** Dimmer 0%...100%	
2	0..255		**Red** 0-100% Red dimmer from dark to bright	
3	0..255		**Green** 0-100% Green dimmer from dark to bright	
4	0..255		**Blue** 0-100% Blue dimmer from dark to bright	

4CH-2

Channel	Value/DMX	percentage	Function	Note
1	0..255		**Red** 0-100% Red dimmer from dark to bright	
2	0..255		**Green** 0-100% Green dimmer from dark to bright	
3	0..255		**Blue** 0-100% Blue dimmer from dark to bright	
4	0..255		**Lime** 0-100% Lime dimmer from dark to bright	

5CH

Channel	Value/DMX	percentage	Function	Note
1	0..255		**Dimmer** Dimmer 0%...100%	
2	0..255		**Red** 0-100% Red dimmer from dark to bright	
3	0..255		**Green** 0-100% Green dimmer from dark to bright	
4	0..255		**Blue** 0-100% Blue dimmer from dark to bright	
5	0..255		**Lime** 0-100% Lime dimmer from dark to bright	

7CH

Channel	Value/DMX	percentage	Function	Note
1			**Shutter**	
	0..9		No function	
	10..255		Strobe effect slow to fast	
2			**Dimmer**	
	0..255		Dimmer 0%...100%	
3			**Red**	
	0..255		0-100% Red dimmer from dark to bright	
4			**Green**	
	0..255		0-100% Green dimmer from dark to bright	
5			**Blue**	
	0..255		0-100% Blue dimmer from dark to bright	
6			**Lime**	
	0..255		0-100% Lime dimmer from dark to bright	
7			**Pixel Function**	
	0..9		No function	
	10..30		Red 100%/Green Up/Blue 0%	
	31..50		Red Down/Green 100%/Blue 0%	
	51..70		Red 0 %/Green 100%/Blue Up	
	71..90		Red 0 %/Green Down/Blue 100%	
	91..110		Red Up/Green 0%/Blue 100%	
	111..130		Red 100%/Green 0%/Blue Down	
	131..150		Red 100%/Green Up/Blue Up	
	151..170		Red Down/Green Down/Blue 100%	
	171..200		Red100%/Green 100%/Blue 100%	
	201..210		White Color Temp 2200K Section	
	211..220		White Color Temp 3200K Section	
	221..230		White Color Temp 4000K Section	
	231..240		White Color Temp 5600K Section	
	241..250		White Color Temp 6800K Section	
	251..255		White Color Temp 7500K Section	

6.Electrical Connection Diagram

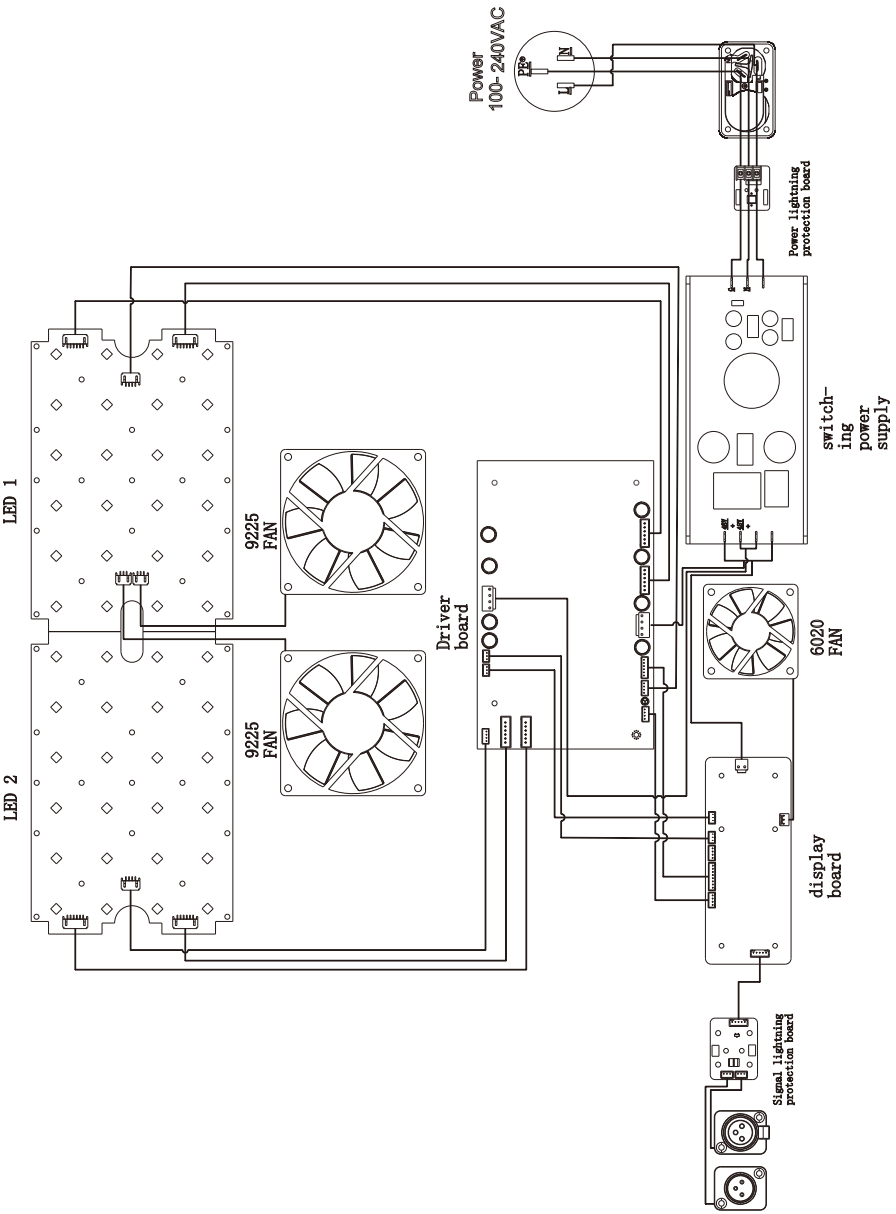

The position of each fan of the fixture:

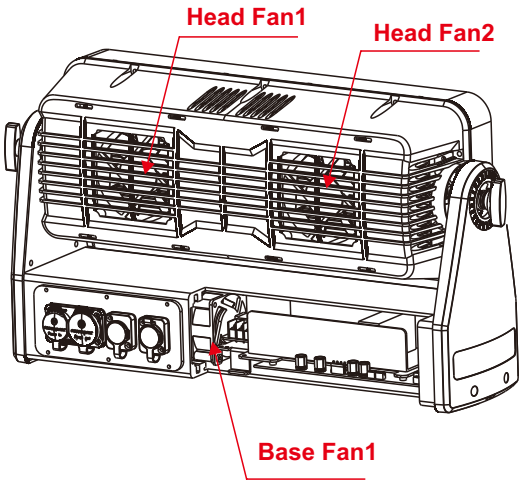

7.Troubleshooting

Following are a few common problems that may occur during operation. Here are some suggestions for troubleshooting:

A. The unit does not work, no light and the fan does not work

- Check the connected power.
- Measure the voltage.
- Check the power indicator to see whether it can be lit up or not.

B. Not responding to the DMX controller

- Check whether the DMX connectors and the DMX cables are connected correctly.
- Check whether the DMX address is correctly set.
- If the intermittent DMX signal problem occurs, check whether the XLR socket and the signal cable are well connected.
- Try it with another DMX controller.
- Check whether the DMX cables run near or alongside to the high-voltage cables, which may damage or interfere with the signal circuit.

8.Fixture Cleaning

It is absolutely essential that the fixture is kept clean to ensure the maximum light-output and allow the fixture to function reliably throughout its life. The fixture must be cleaned regularly to avoid dust, dirt and smoke-fluid residues building up on or within the fixture. The cleaning frequency depends on the application environment. Clean the fixture immediately if the dust enters it to avoid damage to the optical lens due to excessive dust.

* A soft lint-free cloth moistened with any good glass cleaning fluid is recommended, under no circumstances should solvents be used.
* Always dry the parts carefully.
* Clean the external optical lens at least every 20 days and the internal optical lens every 30 days.

CAUTION！！！

Disconnect from mains before starting maintenance operation.

9.Duty exonerative and copyright protectio

* Light source belongs to consumption products, not within the scope of warranty.
* The manufacturer shall not bear any responsibility for any damage caused by failure to operate in accordance with this instruction.
* All the information in this manual shall be interpreted by the manufacturer.
* All the information in this manual shall not be copied without permission.
* The data contained in this statement are subject to change in the future without prior notice.